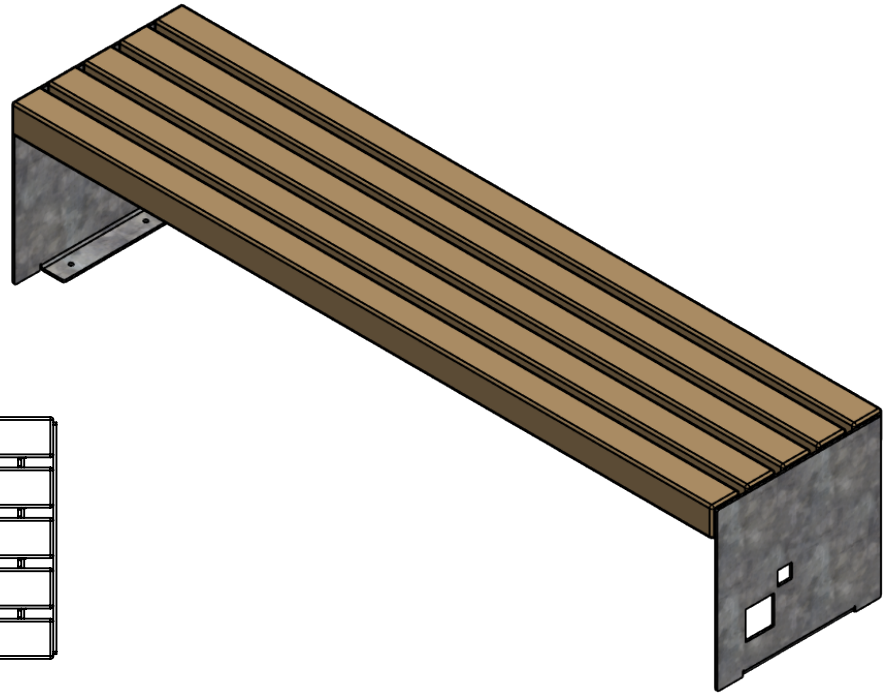

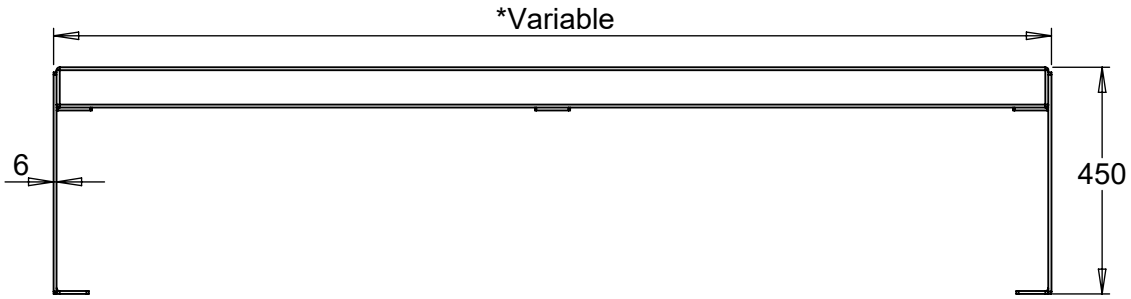

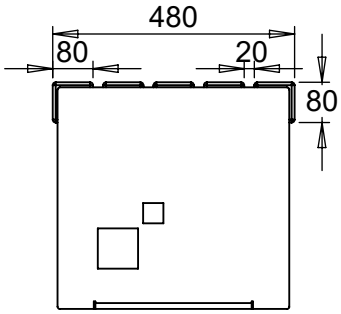

Quantity:	1	*Variable lengths: 580mm, 1380mm, 1980mm, 2480mm

Agreed Sub-base Material: --

Lateral Support: --

REVISIONS			Drawn	SA	PM	--
REV	AMENDMENTS/ NOTE	DATE	Date	20/06/2023		
-	-	--/--/--	Timber	Option Dependent		
-	-	--/--/--	Metal	Option Dependent		
-	-	--/--/--	Finish	Option Dependent	Weight	58 KG
-	-	--/--/--	DO NOT SCALE DRAWINGS	LOGIC MANUFACTURED BESPOKE™ ALL RIGHTS RESERVED		
TOLERANCE: All dimensions tolerance +/- 5mm						

Product
Squared bench

Project:
--

LOGIC™ MANUFACTURED BESPOKE

Logic Manufacture Bespoke™
Project: 01642 373400 specification@logic-bespoke.com

DWG. NO. S136-B-WEB-0001

REV --

SIZE A4

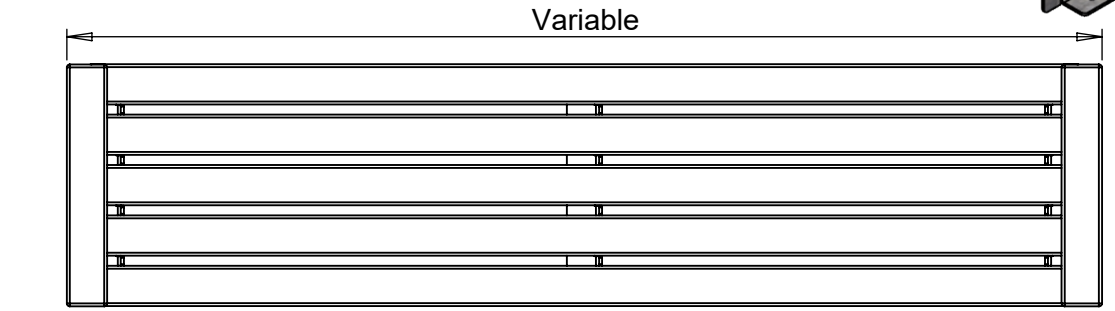

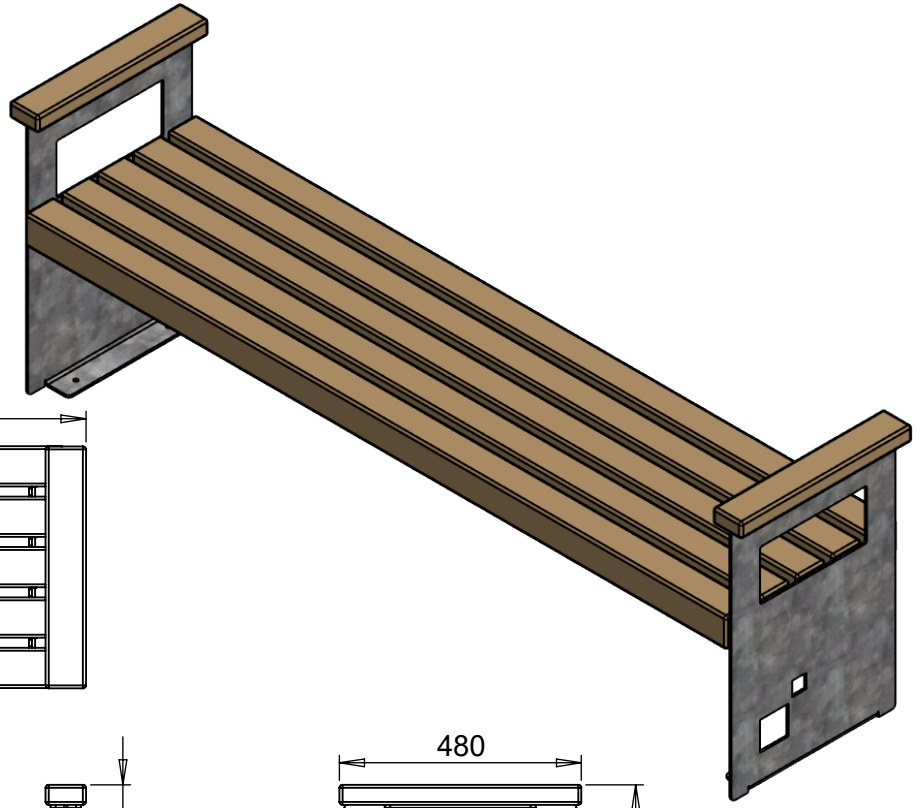

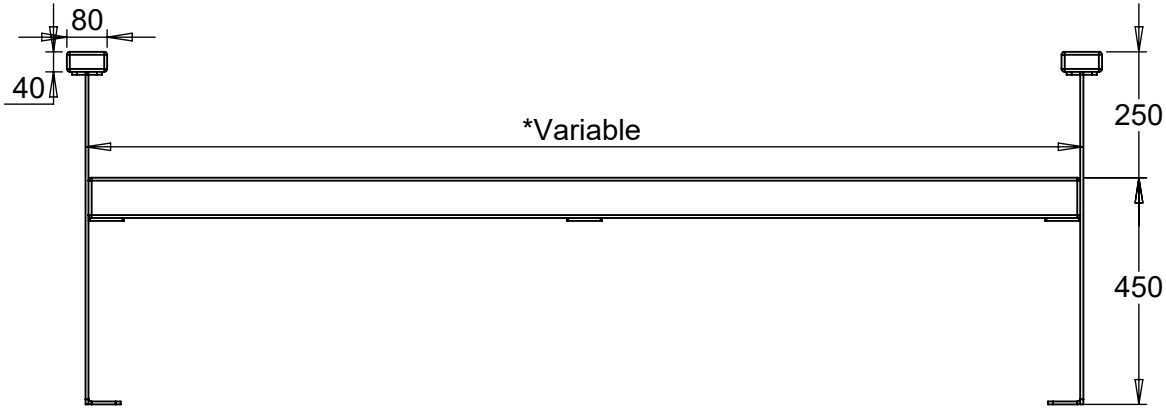

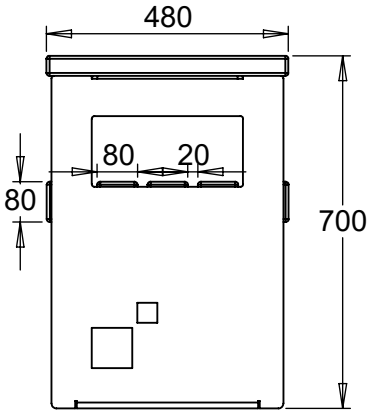

Quantity:	1	*Variable lengths: 580mm, 1380mm, 1980mm, 2480mm

Agreed Sub-base Material: --

Lateral Support: --

REVISIONS						
REV	AMENDMENTS/ NOTE	DATE	Drawn	SA	PM	--
-	-	--/--/--	Date	20/06/2023		
-	-	--/--/--	Timber	Option Dependent		
-	-	--/--/--	Metal	Option Dependent		
-	-	--/--/--	Finish	Option Dependent	Weight	67 KG
-	-	--/--/--	DO NOT SCALE DRAWINGS	LOGIC MANUFACTURED BESPOKE™ ALL RIGHTS RESERVED		
TOLERANCE: All dimensions tolerance +/- 5mm						

Product
Squared bench with arms

Project:
--

LOGIC™ MANUFACTURED BESPOKE

Logic Manufacture Bespoke™
Project: 01642 373400 specification@logic-bespoke.com

DWG. NO. S136-BA-WEB-0001

REV --

SIZE A4

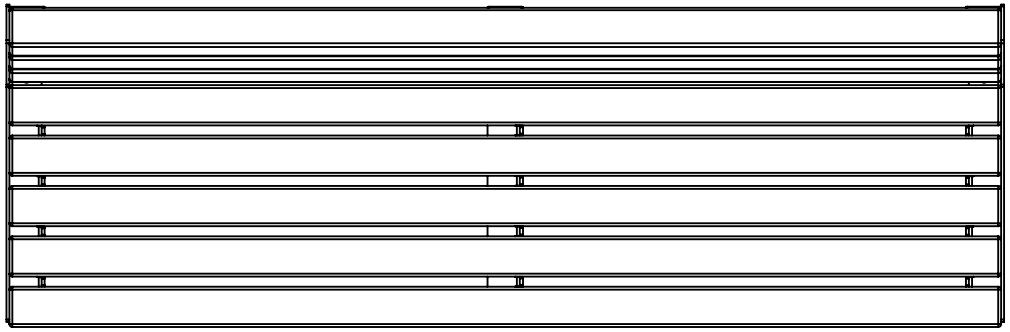

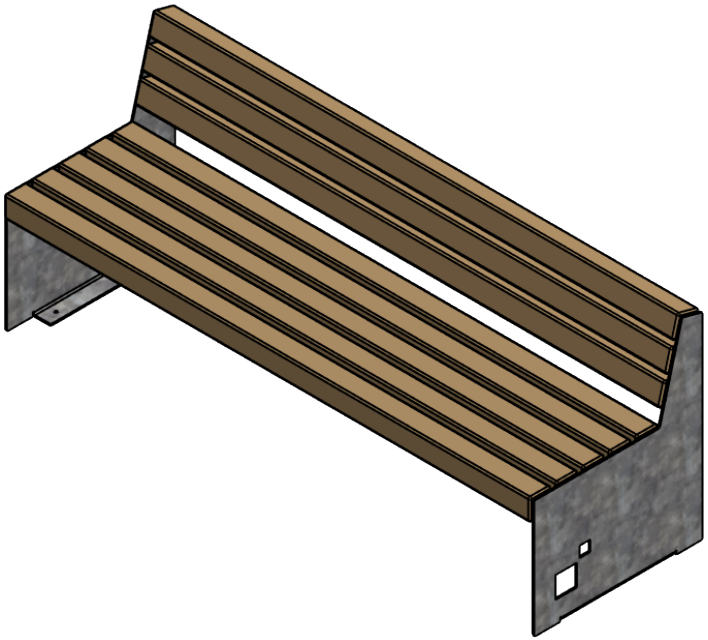

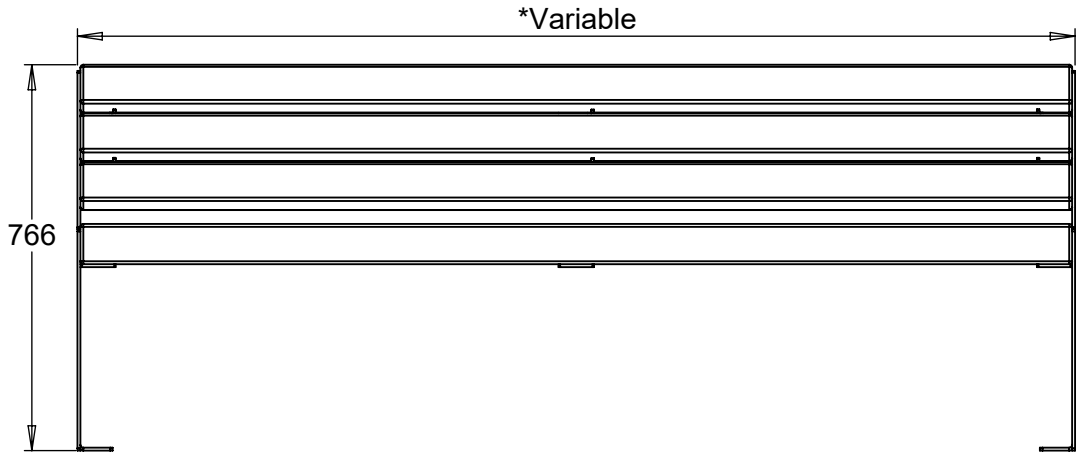

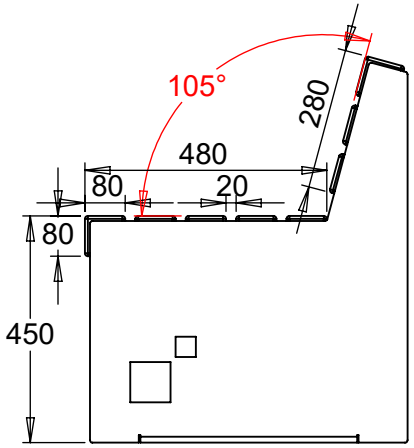

Quantity:	1	*Variable lengths: 580mm, 1380mm, 1980mm, 2480mm

Agreed Sub-base Material: --

Lateral Support: --

REVISIONS						
REV	AMENDMENTS/ NOTE	DATE	Drawn	SA	PM	--
-	-	--/--/--	Date	20/06/2023		
-	-	--/--/--	Timber	Option Dependent		
-	-	--/--/--	Metal	Option Dependent		
-	-	--/--/--	Finish	Option Dependent	Weight	91 KG
-	-	--/--/--	DO NOT SCALE DRAWINGS	LOGIC MANUFACTURED BESPOKE™ ALL RIGHTS RESERVED		
TOLERANCE: All dimensions tolerance +/- 5mm						

Product
Squared seat

Project:
--

LOGIC™ MANUFACTURED BESPOKE

Logic Manufacture Bespoke™
Project: 01642 373400 specification@logic-bespoke.com

DWG. NO. S136-S-WEB-0001

REV --

SIZE A4

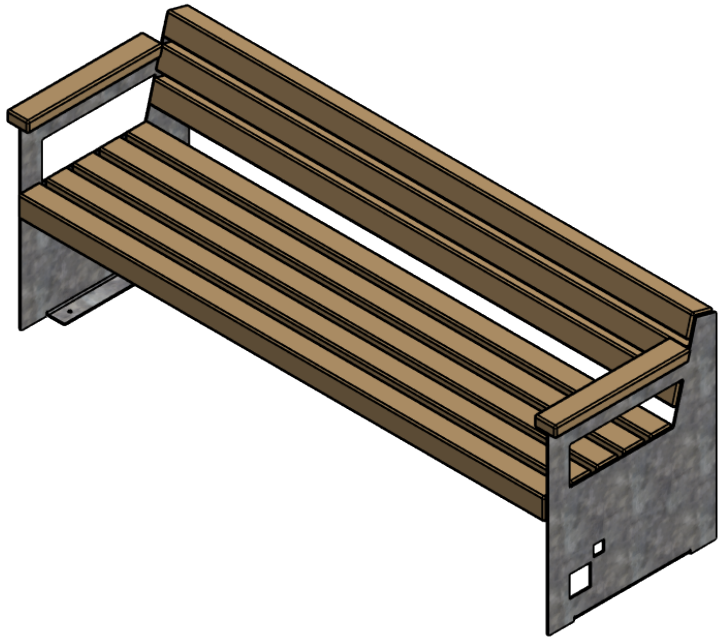

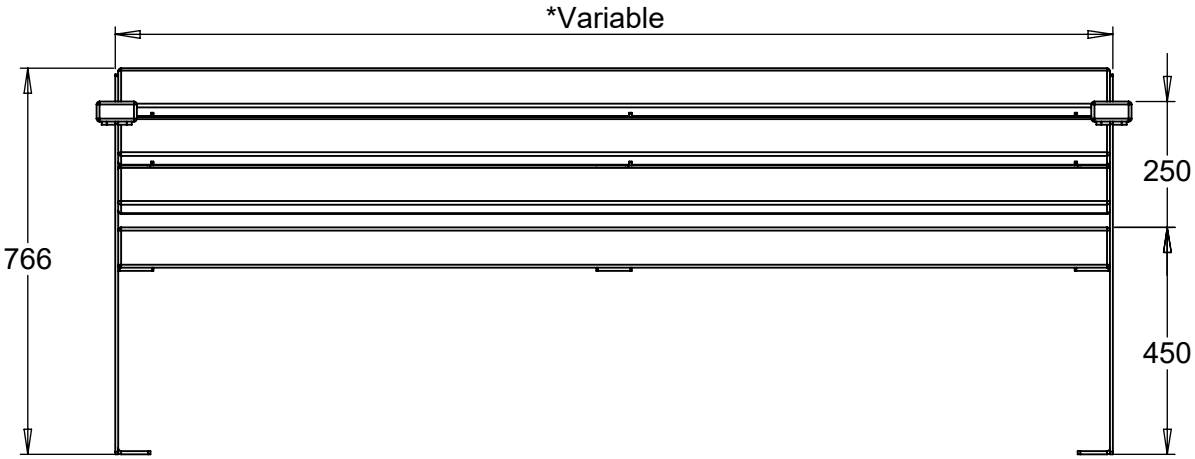

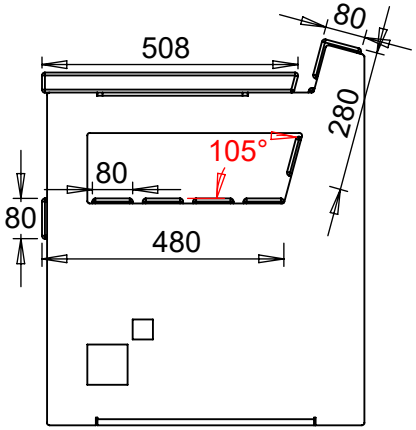

Quantity:	1	*Variable lengths: 580mm, 1380mm, 1980mm, 2480mm

Agreed Sub-base Material: --

Lateral Support: --

REVISIONS			Drawn	SA	PM	--
REV	AMENDMENTS/ NOTE	DATE	Date	20/06/2023		
-	-	--/--/--	Timber	Option Dependent		
-	-	--/--/--	Metal	Option Dependent		
-	-	--/--/--	Finish	Option Dependent	Weight	99 KG
-	-	--/--/--	DO NOT SCALE DRAWINGS	LOGIC MANUFACTURED BESPOKE™ ALL RIGHTS RESERVED		
TOLERANCE: All dimensions tolerance +/- 5mm						

Product
Squared seat with arms

Project:
--

LOGIC™ MANUFACTURED BESPOKE

Logic Manufacture Bespoke™
Project: 01642 373400 specification@logic-bespoke.com

DWG. NO. S136-SA-WEB-0001

REV --

SIZE A4